P1800 Heater Parts

heat wagon

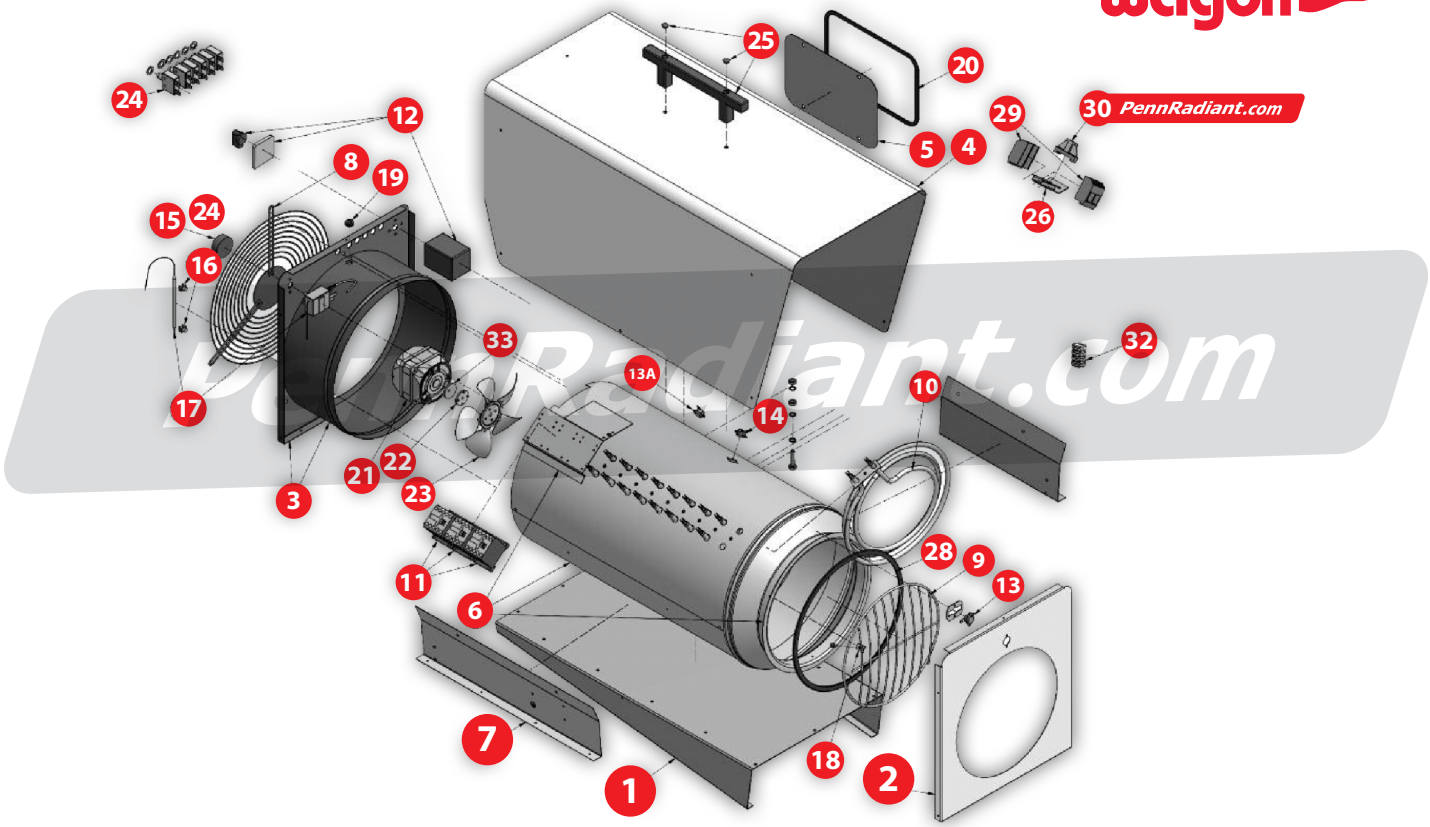

PennRadiant.com

Item	Part #	Description
1	HWP 180007	Bottom Plate
2	HWP 180006	Front Panel (P1800D - HWP 1800037)
3	HWP 180015	Rear Panel
4	HWP 180002	Hood* (No Hatch)
	HWP 180032	Hood with Connection Hatch*
5	HWP 180032A	Connection Hatch*
6	HWP 180003	Inner Mantle (Including Air Cone)
7	HWP 180009	Bracket
8	HWP 180019	Rear Grill (P1800D - HWP 1800035)
9	HWP 180005	Front Grill
10	HWP 180026	Heating Element (9 per Heater)
11	HWP 180022	Contactor
12	HWP 180021	Main Switch Assembly
13A	HWP 180024	Overheat Limit Switch (Inner)
13	HWP 180008	Overheat Limit Switch (Outer)
14	HWP 180025	Unit Cooldown Switch
15	HWP 400018	Thermostat Knob
15	HWP 20577	Thermostat Knob
		For P1800-1, S/N 1036 & Beyond
		For P1800-3, S/N 3509 & Beyond
		For P1800D, S/N 0031 & Beyond
16	HWP 37910	Plastic Bracket
17	HWP 180017	Ambient Thermostat
17	HWP 20220	Ambient Thermostat
		(Knob Not Included)
		For P1800-1, S/N 1036 & Beyond
		For P1800-3, S/N 3509 & Beyond
		For P1800D, S/N 0031 & Beyond

Item	Part #	Description
18	HWP 82760	Plate Nut
19	HWP 36809	Guard Ring
20	HWP 401604	Gasket for Connection Hatch*
21	HWP 180014	Fan Motor
	HWP 14350	(P1800D - Includes Blade)
22	HWP 180033	Fan Hub (7mm Shaft) P1800-1, P1800-3 only
23	HWP 180012	Fan Blade P1800-1, P1800-3 only
24	HWP 180027	Circuit Breakers (P1800-1 Only)
25	HWP 180001	Handle
26	SFP S1500-105	Bracket for Terminal Block (P1800-1 Only)
28	HWP 180004	Gasket
29	HWP 36615	Terminal Block (P1800-1 Only) (Qty. 3)
30	HWP 36630	Locking Clamp (P1800-1 Only) (Qty. 2)
32	HWP 36704	Terminal Block (P1800-3 Only)
33	HWP 180011	Fan Hub Cap & Boltkl

**Similar Equipped Models Only*

Parts Not Shown

ACC WD1225	Duct for P1800D (12"x25' long)
HWP 1800036	Capacitor for #21, P1800D
HWP 1800038	Capacitor Holder
HWP 37910	Plastic Bracket for TA Bulb
HWP 32116	Heating Coil Wire (sold by ft.)
HWP 180016	Strain Relief
HWP 86800	Silicone Sleeve (4' section)
HWP 1800037	P1800D Outlet